Work Order ID 69329

Monday, May 09, 2011 10:09:20 AM

Item ID: DSI 9500-011 **Accept** **Setup Start**

Revision ID:

Item Name: Lug Upgrade Installation, 206 A/B Float Step **Stop**

Start Date: 5/9/2011 **Start Qty:** 2.00 **Cust Item ID:**

Required Date: 5/9/2011 **Req'd Qty:** 2.00 **Customer:**

Reference:

Approvals: **Process Plan:** CMF **Date:** 11-05-09 **Tooling:** _____ **Date:** _____ **Run Start**

QC: _____ **Date:** _____ **SPC (Y/N):** _____ **Date:** _____ **Stop**

Sequence ID/ Work Center ID	Operation Description	Set Up/ Run Hours	Tool ID	Tool #	Plan Code	Accept Qty	Reject Qty	Reject Number	Insp. Stamp
Draw Nbr / **Revision Nbr**									
DSI 9500 / A									
100		0.00							
DC	**Memo**	0.00							
Document Control	Photocopy bluefile &type labels per PPP DSI9500-011 CHG001								
110	Pick Kit	0.00							
Packaging	**Memo**	0.00							
Packaging									
120	QC4- 100% Inspect kits for completeness	0.00							
QC	**Memo**	0.00							
Quality Control									

CMF 11-05-09

BG 11-5-9

11/05/09

11/05/9 2

11/05/09

Dart Aerospace Ltd

W/O:		WORK ORDER CHANGES					
DATE	STEP	PROCEDURE CHANGE	By	Date	Qty	Approval Chief Eng / Prod Mgr	Approval QC Inspector

Part No: _____ **PAR #:** _____ **Fault Category:** _____ **NCR:** Yes No **DQA:** _____ **Date:** _____

Resolution: _____ **Disposition:** _____ **QA: N/C Closed:** _____ **Date:** _____

NCR:		WORK ORDER NON-CONFORMANCE (NCR)						
DATE	STEP	Description of NC Section A	Corrective Action Section B			Verification Section C	Approval Chief Eng	Approval QC Inspector
			Initial Chief Eng	Action Description Chief Eng	Sign & Date			

NOTE: Date & initial all entries

H:\fFORMS\Quality Assurance\approved QA\NCRWO RevE

Work Order ID 69329

Monday, May 09, 2011 10:09:20 AM

Item ID: DSI 9500-011 **Accept** **Setup Start**

Revision ID: **Stop**

Item Name: Lug Upgrade Installation, 206 A/B Float Step

Start Date: 5/9/2011 **Start Qty:** 2.00 **Cust Item ID:**

Required Date: 5/9/2011 **Req'd Qty:** 2.00 **Customer:**

Reference:

Approvals: **Process Plan:** _____ **Date:** _____ **Tooling:** _____ **Date:** _____ **Run Start**

QC: _____ **Date:** _____ **SPC (Y/N):** _____ **Date:** _____ **Stop**

Sequence ID/ Work Center ID	Operation Description	Set Up/ Run Hours	Tool ID	Tool #	Plan Code	Accept Qty	Reject Qty	Reject Number	Insp. Stamp
130		0.00							
Packaging	**Memo**	0.00							
Packaging	Identify and pack for shipping as per PPP DSI9500-011 Location: 20 PPP rev: Draft					11/5/9		20	
140	QC21- Final Inspection - Work Order Release	0.00							
QC	**Memo**	0.00					11/5/9		
Quality Control									

MF
11-05-09

Dart Aerospace Ltd

W/O:		WORK ORDER CHANGES					
DATE	STEP	PROCEDURE CHANGE	By	Date	Qty	Approval Chief Eng / Prod Mgr	Approval QC Inspector

Part No: _____ **PAR #:** _____ **Fault Category:** _____ **NCR:** Yes No **DQA:** _____ **Date:** _____

Resolution: _____ **Disposition:** _____ **QA: N/C Closed:** _____ **Date:** _____

NCR:		WORK ORDER NON-CONFORMANCE (NCR)						
DATE	STEP	Description of NC Section A	Corrective Action Section B			Verification Section C	Approval Chief Eng	Approval QC Inspector
			Initial Chief Eng	Action Description Chief Eng	Sign & Date			

NOTE: Date & initial all entries

H:\fFORMS\Quality Assurance\approved QA\NCRWO RevE

Picklist Print

Monday, May 09, 2011 10:09:16 AM

Work Order ID: 69329

Parent Item: DSI 9500-011

Parent Item Name: Lug Upgrade Installation, 206 A/B Float Step

Start Date: 5/9/2011 **Required Date:** 5/9/2011

Start Qty: 2.00 **Required Qty:** 2.00

Comments: IPP Rev:A new issue DD 10.03.01 verified by:JLM

Component Item ID/ Item Name	Replacement Item ID	Mfg/ Purch	Bin Item	Primary Location	Last Location	Route Seq ID	Unit of Measure	Qty on Hand	Qty per Kit	Total Qty	Qty Issued	Date Issued	Status
D2731-7 Mounting Lug		Manufactured	No			110	Each	79.0000	2	4			

Location	Loc Qty	Loc Code
ST470	79	
59202	4	
61653	2	
62929	41	
66427	32	

Component Item ID/ Item Name	Replacement Item ID	Mfg/ Purch	Bin Item	Primary Location	Last Location	Route Seq ID	Unit of Measure	Qty on Hand	Qty per Kit	Total Qty	Qty Issued	Date Issued	Status
D2732-030 Rubber Cushion		Manufactured	No			110	Each	12.0000	8	16			

Location	Loc Qty	Loc Code
ST410	12	
56516	10	
65395	2	

Component Item ID/ Item Name	Replacement Item ID	Mfg/ Purch	Bin Item	Primary Location	Last Location	Route Seq ID	Unit of Measure	Qty on Hand	Qty per Kit	Total Qty	Qty Issued	Date Issued	Status
D3394-043 Lug Assembly		Manufactured	No			110	Each	100.0000	2	4			

Location	Loc Qty	Loc Code
ST475	100	
52331	4	
62005	2	
62930	30	
62976	30	
66429	34	

Dart Aerospace Ltd

W/O:		WORK ORDER CHANGES					
DATE	STEP	PROCEDURE CHANGE	By	Date	Qty	Approval Chief Eng / Prod Mgr	Approval QC Inspector

Part No: _____ **PAR #:** _____ **Fault Category:** _____ **NCR:** Yes No **DQA:** _____ **Date:** _____

Resolution: _____ **Disposition:** _____ **QA: N/C Closed:** _____ **Date:** _____

NCR:		WORK ORDER NON-CONFORMANCE (NCR)						
DATE	STEP	Description of NC Section A	Corrective Action Section B			Verification Section C	Approval Chief Eng	Approval QC Inspector
			Initial Chief Eng	Action Description Chief Eng	Sign & Date			

NOTE: Date & initial all entries

H:\fFORMS\Quality Assurance\approved QA\NCRWO RevE

Picklist Print

Monday, May 09, 2011 10:09:16 AM

Work Order ID: 69329

Parent Item: DSI 9500-011

Parent Item Name: Lug Upgrade Installation, 206 A/B Float Step

Start Date: 5/9/2011 **Required Date:** 5/9/2011

Start Qty: 2.00 **Required Qty:** 2.00

D4064-041 Mounting Lug	Manufactured	No	110	Each	33.0000	1	2	

Location		Loc Qty	Loc Code	
ST462		18		
	62977	18		
ST464		15		
	58980	14		58980
	58985	1		

AN4C13A BOLT	Purchased	No	110	Each	32.0000	4	8	

Location		Loc Qty	Loc Code	
ST353		7		
	117366	7		M117366 7X
ST357		25		
	117619	25		M117619 1X

AN4C14A Bolt	Purchased	No	110	Each	86.0000	4	8	M117441 6X Pull 5/2 (2)

Location		Loc Qty	Loc Code	
ST357		80		
	117366	40		
	117441	40		
ST358		6		
	115767	4		
	115936	2		M115936 2X

Dart Aerospace Ltd

W/O:		WORK ORDER CHANGES					
DATE	STEP	PROCEDURE CHANGE	By	Date	Qty	Approval Chief Eng / Prod Mgr	Approval QC Inspector

Part No: _____ **PAR #:** _____ **Fault Category:** _____ **NCR:** Yes No **DQA:** _____ **Date:** _____

Resolution: _____ **Disposition:** _____ **QA: N/C Closed:** _____ **Date:** _____

NCR:		WORK ORDER NON-CONFORMANCE (NCR)						
DATE	STEP	Description of NC Section A	Corrective Action Section B			Verification Section C	Approval Chief Eng	Approval QC Inspector
			Initial Chief Eng	Action Description Chief Eng	Sign & Date			

NOTE: Date & initial all entries

H:\fFORMS\Quality Assurance\approved QA\NCRWO RevE

Picklist Print

Monday, May 09, 2011 10:09:17 AM

Work Order ID: 69329

Parent Item: DSI 9500-011

Parent Item Name: Lug Upgrade Installation, 206 A/B Float Step

Start Date: 5/9/2011 **Required Date:** 5/9/2011

Start Qty: 2.00 **Required Qty:** 2.00

AN4C15A Bolt	Purchased	No	110	Each	103.0000	4	8	

Location	Loc Qty	Loc Code	
ST358	103		
115936	43		115936
117441	60		

AN960C416 washer	NAS1149C0463R	Purchased	No	110	Each	15.0000	16	32

M116900 17 to NAS1149C0432R

Location	Loc Qty	Loc Code	
ST346	15		
100993	15		100993 15 to

AN960C416L WASHER	NAS1149C0432R	Purchased	No	110	Each	0.0000	8	16

M116900

NAS1515H4L WASHER		Purchased	No	110	Each	556.0000	24	48

Location	Loc Qty	Loc Code	
FG	40		
103691	40		
ST266	20		
114265	20		
ST277	496		
117363	496		117363

Dart Aerospace Ltd

W/O:		WORK ORDER CHANGES					
DATE	STEP	PROCEDURE CHANGE	By	Date	Qty	Approval Chief Eng / Prod Mgr	Approval QC Inspector

Part No: _____ **PAR #:** _____ **Fault Category:** _____ **NCR:** Yes No **DQA:** _____ **Date:** _____

Resolution: _____ **Disposition:** _____ **QA: N/C Closed:** _____ **Date:** _____

NCR:		WORK ORDER NON-CONFORMANCE (NCR)						
DATE	STEP	Description of NC Section A	Corrective Action Section B			Verification Section C	Approval Chief Eng	Approval QC Inspector
			Initial Chief Eng	Action Description Chief Eng	Sign & Date			

NOTE: Date & initial all entries

H:\fFORMS\Quality Assurance\approved QA\NCRWO RevE

Picklist Print

Monday, May 09, 2011 10:09:17 AM

Work Order ID: 69329

Parent Item: DSI 9500-011

Parent Item Name: Lug Upgrade Installation, 206 A/B Float Step

Start Date: 5/9/2011 **Required Date:** 5/9/2011

Start Qty: 2.00 **Required Qty:** 2.00

MS21043-4	Purchased	No		110	Each	1,522.000	12	24	
Nut									

5
+2

Location		Loc Qty	Loc Code
FG		40	
	104603	40	
ST300		600	
	117423	600	
ST301		882	
	114523	3	
	116188	79	116188
	116549	300	
	117601	500	

Dart Aerospace Ltd

W/O:		WORK ORDER CHANGES						
DATE	STEP	PROCEDURE CHANGE	By	Date	Qty	Approval Chief Eng / Prod Mgr	Approval QC Inspector

Part No: _____ **PAR #:** _____ **Fault Category:** _____ **NCR:** Yes No **DQA:** _____ **Date:** _____

Resolution: _____ **Disposition:** _____ **QA: N/C Closed:** _____ **Date:** _____

NCR:		WORK ORDER NON-CONFORMANCE (NCR)						
DATE	STEP	Description of NC Section A	Corrective Action Section B			Verification Section C	Approval Chief Eng	Approval QC Inspector
			Initial Chief Eng	Action Description Chief Eng	Sign & Date			

NOTE: Date & initial all entries

H:\fFORMS\Quality Assurance\approved QA\NCRWO RevE

DART SERVICE INSTRUCTION

TO AMEND INSTALLATION INSTRUCTIONS IIN-D206-628 REV. F

REF FAA STC: SA00500SE

REF TCCA STC: SH98-14

REF EASA STC EASA.IM.R.S.01339

REFERENCE ONLY

PURPOSE:
UNMODIFIED D206-628-013/-014 STEP INSTALLATIONS AT CHANGE 005 (OR EARLIER) WILL NOT INSTALL AT THE 18.50" HEIGHT REQUIRED FOR COMPATIBILITY WITH APICAL TRI-BAG FLOATS.

CHANGE:
D206-628-013/-014 STEP INSTALLATIONS AT CHANGE 006 (OR LATER) CONTAIN NEW MOUNTING LUGS FOR COMPATIBLITY WITH APICAL FLOATS.

CONTRARY TO INSTALLATION INSTRUCTIONS IIN-D206-628, FOR COMPATIBILITY WITH APICAL TRI-BAG FLOATS, THE D206-628-013/-014 STEP INSTALLATIONS SHOULD BE INSTALLED AT A HEIGHT OF **17.25"** PER FIGURE 1 OF THIS SERVICE INSTRUCTION.

WHEN INSTALLING THE MOUNTING LUGS, IT IS ACCEPTABLE TO USE LONGER/SHORTER AN4C BOLTS AS REQUIRED AND/OR INSTALL EXTRA AN960C416/416L WASHERS UNDER THE BOLT HEADS TO ENSURE 1.5 TO 4 THREADS IN SAFETY.

PARTS LIST OF SECTION 5.2 (PG. 12) OF IIN-D206-628-013/-014 REV. F IS AMENDED AS FOLLOWS:

QTY -013	QTY -014	QTY -023	QTY -024	QTY -033	QTY -034	Part Number	Description
X						**D206-628-013**	**206 A/B FLOAT STEP INSTALLATION, LH**
	X					**D206-628-014**	**206 A/B FLOAT STEP INSTALLATION, RH**

WAS:

2	2					D2731-3	MOUNTING LUG
2	2					D2731-7	MOUNTING LUG
2	2					D3394-041	MOUNTING LUG
2	2					D3394-043	MOUNTING LUG
16	16					AN960C416L	WASHER

IS:

4	4					D2731-7	MOUNTING LUG
4	4					D3394-043	MOUNTING LUG
1	1					D4064-041	MOUNTING LUG (NEW)
1	1					*D4064-1	LUG
2	2					*MS35489-93	GROMMET
16	16					AN960C416	WASHER

* DENOTES THAT PART IS INCLUDED IN ASSEMBLY ABOVE

REV.	DESCRIPTION	BY	DATE
A	NEW ISSUE	CP	10.01.29

DESIGN	QP	**DART AEROSPACE USA, INC** PORT HADLOCK, WA
DRAWN	QP	
CHECKED		DRAWING NO. REV. A
MFG. APPR.	N/A	DSI 9500 SHEET 1 OF 4
APPROVED		TITLE SCALE
DE APPR.		MOUNTING LUG CHANGE NTS
DATE	10.01.29	

COPYRIGHT © 2010 BY DART AEROSPACE USA, INC
THIS DOCUMENT IS PRIVATE AND CONFIDENTIAL AND IS SUPPLIED ON THE EXPRESS CONDITION THAT IT IS NOT TO BE USED FOR ANY PURPOSE OR COPIED OR COMMUNICATED TO ANY OTHER PERSON WITHOUT WRITTEN PERMISSION FROM DART AEROSPACE USA, INC.

THE DSI-9500-011 LUG UPGRADE KIT IS AVAILABLE TO UPDATE EXISTING D206-628-013/-014 STEPS TO CHANGE 006. THE UPGRADE KIT INCLUDES ADDITIONAL LUGS FOR STEPS INSTALLED WITH APICAL TRI-BAG FLOATS (AT 17.25" HEIGHT). EXISTING D206-628-013/-014 STEPS INSTALLED WITH OEM FLOATS (AT 15.00" HEIGHT) DO NOT REQUIRE THE KIT. THE UPGRADE KIT SHOULD BE INSTALLED PER THIS SERVICE INSTRUCTION AND IIN-D206-628 REV. F.

QTY -011	Part Number	Description
X	DSI-9500-011	LUG UPGRADE KIT, 206 A/B FLOAT STEP
2	D2731-7	MOUNTING LUG (REPLACES D2731-3 MOUNTING LUG)
8	D2732-030	RUBBER CUSHION
2	D3394-043	MOUNTING LUG (REPLACES D3394-041 MOUNTING LUG)
1	D4064-041	MOUNTING LUG (REPLACES ONE D3394-043 FOR APICAL TRI-BAG FLOAT COMPATIBLE INSTALL)
4	AN4C13A	BOLT
4	AN4C14A	BOLT
4	AN4C15A	BOLT
16	AN960C416	WASHER
8	AN960C416L	WASHER
24	NAS1515H4L	WASHER
12	MS21043-4	NUT

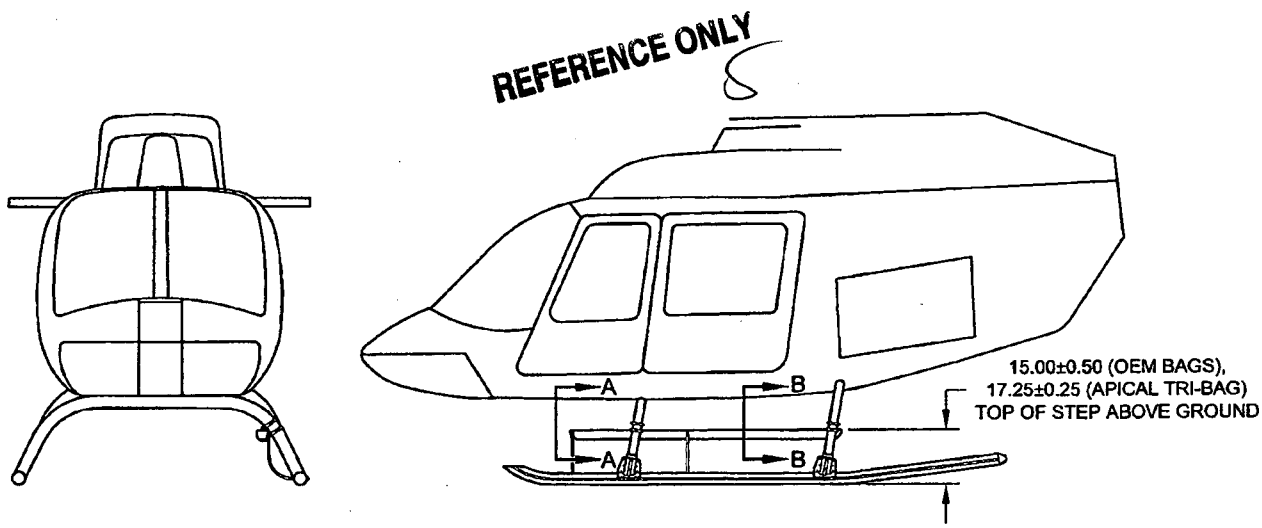

FIGURE 1

D206-628-013 (SHOWN) / -014 (OPPOSITE)
206 A/B FLOAT STEP INSTALLATION

DESIGN		DART AEROSPACE USA, INC PORT HADLOCK, WA
DRAWN		
CHECKED		DRAWING NO. REV. A
MFG. APPR.	N/A	DSI 9500 SHEET 2 OF 4
APPROVED		TITLE SCALE
DE APPR.		MOUNTING LUG CHANGE NTS
DATE	10.01.29	

COPYRIGHT © 2010 BY DART AEROSPACE USA, INC
THIS DOCUMENT IS PRIVATE AND CONFIDENTIAL AND IS SUPPLIED ON THE EXPRESS CONDITION THAT IT IS NOT TO BE USED FOR ANY PURPOSE OR COPIED OR COMMUNICATED TO ANY OTHER PERSON WITHOUT WRITTEN PERMISSION FROM DART AEROSPACE USA, INC.

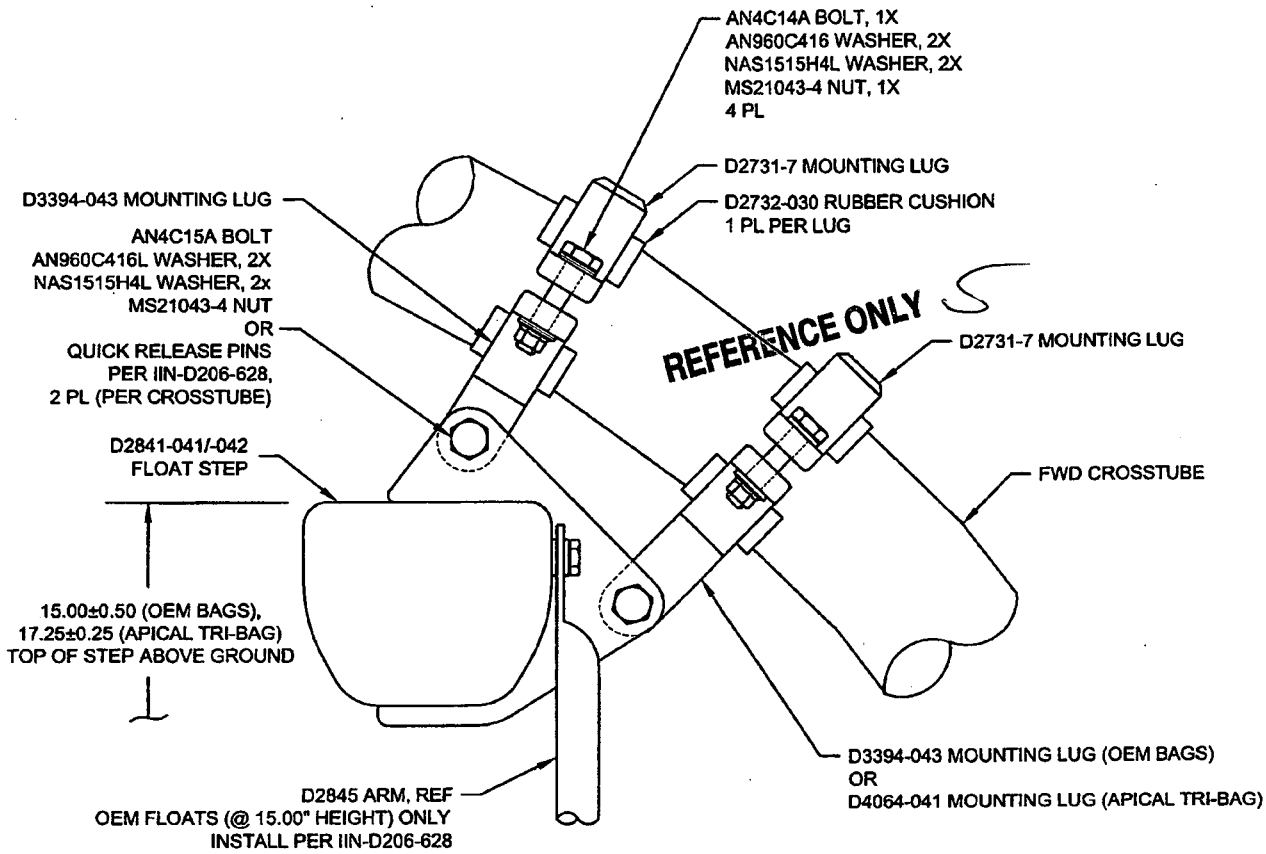

SECTION A-A

FWD CROSSTUBE CLAMPING DETAIL

DESIGN		**DART AEROSPACE USA, INC** PORT HADLOCK, WA	
DRAWN			
CHECKED		DRAWING NO.	REV. A
MFG. APPR.	N/A	DSI 9500	SHEET 3 OF 4
APPROVED		TITLE	SCALE
DE APPR.		MOUNTING LUG CHANGE	NTS
DATE	10.01.29		

COPYRIGHT © 2010 BY DART AEROSPACE USA, INC
THIS DOCUMENT IS PRIVATE AND CONFIDENTIAL AND IS SUPPLIED ON THE EXPRESS CONDITION THAT IT IS NOT TO BE USED FOR ANY PURPOSE OR COPIED OR COMMUNICATED TO ANY OTHER PERSON WITHOUT WRITTEN PERMISSION FROM DART AEROSPACE USA, INC.

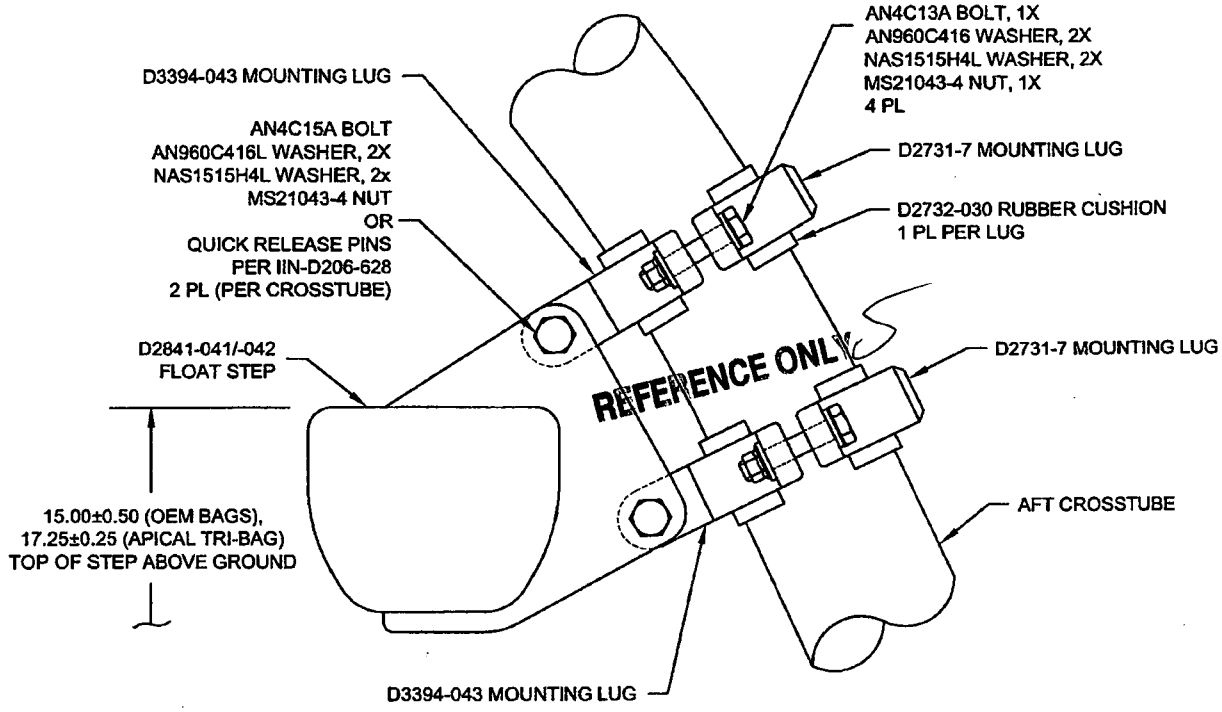

SECTION B-B

AFT CROSSTUBE CLAMPING DETAIL

DESIGN		**DART AEROSPACE USA, INC** PORT HADLOCK, WA
DRAWN		
CHECKED		DRAWING NO. REV. A
MFG. APPR.	N/A	DSI 9500 SHEET 4 OF 4
APPROVED		TITLE SCALE
DE APPR.		MOUNTING LUG CHANGE NTS
DATE	10.01.29	

COPYRIGHT © 2010 BY DART AEROSPACE USA, INC
THIS DOCUMENT IS PRIVATE AND CONFIDENTIAL AND IS SUPPLIED ON THE EXPRESS CONDITION THAT IT IS NOT TO BE USED FOR ANY PURPOSE OR COPIED OR COMMUNICATED TO ANY OTHER PERSON WITHOUT WRITTEN PERMISSION FROM DART AEROSPACE USA, INC.